FIG.ZMS 06 CGGG PN16 DN15/200 F4-F5

DS-767
Rev.11
For Reference ☑
For Approval ☐

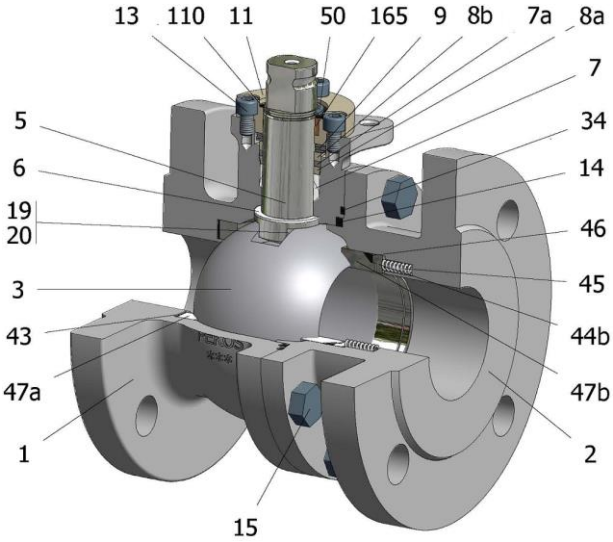

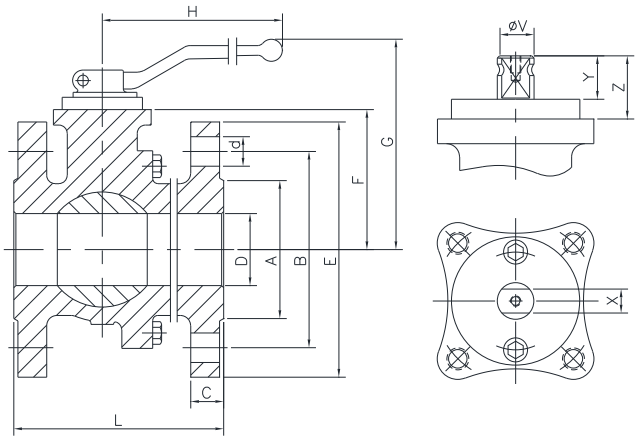

Position	Description	Material
01	Body 1	S.S. 1.4408
02	Body 2	S.S. 1.4408
03	Ball	1.4408+Cr-Carbide
05	Stem	XM-19
06	Stem seal	S.S. 1.4401 Nitrided
07	Stem packing 1	Graphite
07a	Stem packing 2	Graphite
08	Gland packing	S.S. 1.4401
08a	Gland packing 1	S.S. 1.4401
09	Spring washer	Inconel X718
11	Cover	S.S. 1.4408
13	Cover bolt	A4-70
14	Body seal 1	Graphite
15	Body bolt	A4-70
16	Handle	WCB
17	Handle bolt	1.045(8.8)
19	Spring	S.S. 1.4401
20	Antistatic ball	S.S. 1.4401
34	Body seal 2	Graphite
43	Seat seal	Graphite
44b	Ring seat 2	S.S. 1.4401
45	Spring seat	Inconel X750
46	Seat seal	Graphite
47	Metal seat	1.4401+Cr-Carbide
50	Subjection ring	S.S. 1.4021
110	Subjection ring seal	S.S. 1.4401 Nitrided
165	Stem bearing	Carbongraphite

General features

Floating ball.
Split body.
Full bore.
Metal to Metal.
Bidirectional.
Spring loaded seat system.
Anti Blow out proof stem.
Autoadjustable packing.
Anti static device.
Self-cavity pressure relief.

Standards

Top flange ISO 5211
Flanges EN 1092-01
Face to face EN 558
Testing EN-12266, ISO 5208
Design EN-12516, ISO 17292

Official approvals

CERTIFICATE FIRE SAFE
TA-LUFT VDI 2440
ISO 15848-1
ATEX 2014/34/EU
PED 2014/68/EU
SIL 3 CAPABLE

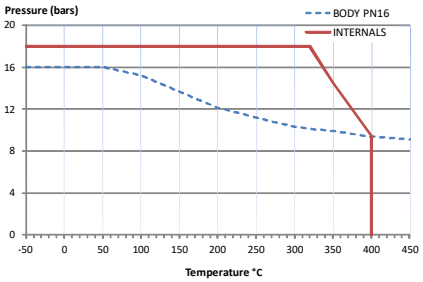

PEKOS GROUP CERTIFICATES:
ISO 9001: 2015 / 2014/68/EU /API-6D

DIMENSIONS & Technical information

DN	*PN*	*D*	*L*	*E*	*A*	*B*	*C*	*F*	*H*	*G*	*V*	*X*	*Y*	*Z*	*n x d*	*ISO 5211*	*Torque*	*MAST*	*Weight*
15	16	15	115	95	45	65	16	51	185	105	14	11	11	13,5	4 x 14	F05	18	81	3
20	16	20	120	105	58	75	18	53	185	107	14	11	11	13,5	4 x 14	F05	23	81	4
25	16	25	125	115	68	85	18	59	185	113	18	14	17	19,5	4 x 14	F05	32	175	5
32	16	32	130	140	78	100	18	64	185	118	18	14	17	19,5	4 x 18	F05	53	175	6
40	16	40	140	150	88	110	18	75	293	145	22	17	20	30	4 x 18	F07	71	464	8
50	16	50	150	165	102	125	20	83	293	153	22	17	20	30	4 x 18	F07	100	464	11
65	16	65	170	185	122	145	18	96	293	166	22	17	20	30	8 x 18	F07	127	464	17
80	16	80	180	200	138	160	20	114	450	205	28	22	22	40	8 x 18	F10	195	969	22
100	16	100	190	220	158	180	20	128	450	220	28	22	22	40	8 x 18	F10	253	969	30
125	16	125	325	250	188	210	22	158	740	267	36	27	35	50	8 x 18	F12	552	1990	56
150	16	150	350	285	212	240	22	175	740	284	36	27	35	50	8 x 22	F12	874	1990	75
200	16	200	400	340	268	295	24	245	750	362	48	36	40	63	12 x 22	F14	1242	4716	134

*** Depending on service conditions.* ** Dimensions are in mm.* ** Torque & MAST are in Nm.* ** Weight is in Kilograms*
** Torque values have been measured ΔP at maximum rating at room temperature*

Rec del Molinar, 9-P-I. El Circuit - 08160 Montmeló (Barcelona)-Spain

Tel.: (+34) 93 568 92 56

pekos@pekos.es

-The contents of this document are subject to change without prior notice due to the continuous development processes.