FIG.KRB 806 SGSGV CL800 1/2"-2" SW

DS-423
Rev.15
For Reference ☑
For Approval ☐

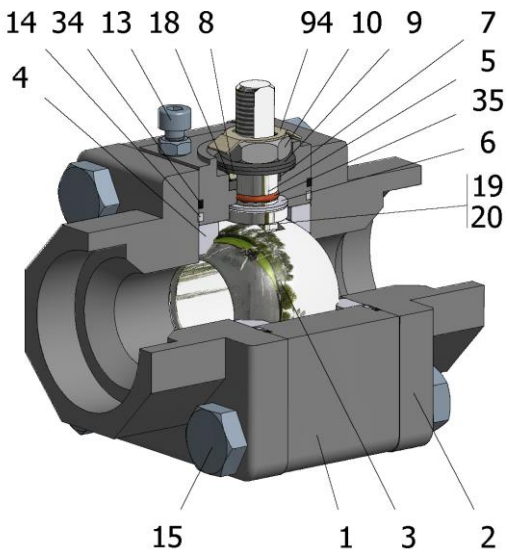

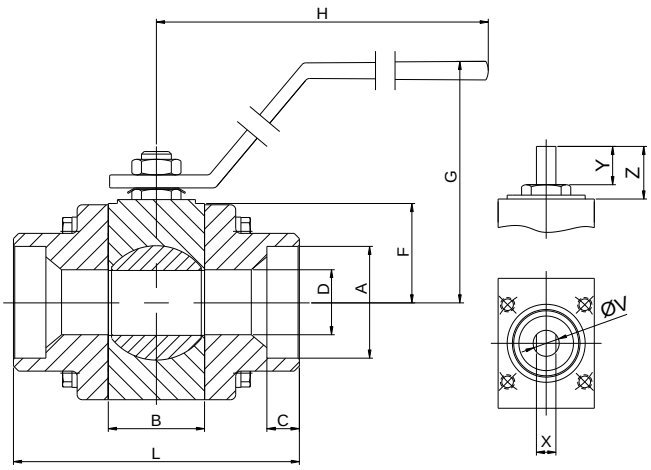

Position	Description	Material
01	Body 1	A182 F316/316L
02	Body 2	A182 F316/316L
03	Ball	A182 F316/316L
04	Seat	PTFE (modified)+CG
05	Stem	S.S. AISI 316/316L
06	Stem seal	PTFE (modified)+CG
07	Stem packing	Graphite
08	Gland packing	S.S. AISI 316
09	Spring washer	S.S. AISI 301
10	Stem nut	S.S. AISI 304
13	Stop bolt	S.S. (316)
14	Body seal 1	PTFE (modified)+CG
15	Body bolt	A193 B8M
16	Handle	PAINTED C.S.
18	Thrust washer	PTFE (modified)+CG
19	Spring	S.S. AISI 316
20	Antistatic ball	S.S. AISI 316
34	Body seal 2	Graphite
35	O ring stem	FKM
94	Stop washer	S.S. AISI 301

General features

Floating ball.
Three pieces.
Reduced bore.
Soft seat.
Bidirectional.
Anti Blow out proof stem.
Autoadjustable packing.
Anti static device.
Self-cavity pressure relief.
Allows in-line maintenance

Standards

Top flange ISO 5211
Socket-welding ends B16.11
Materials according to NACE MR0175
Design B16.34
Testing API 598, BS 6755-1

Official approvals

CERTIFICATE FIRE SAFE
ATEX 2014/34/EU
PED 2014/68/EU
SIL 3 CAPABLE

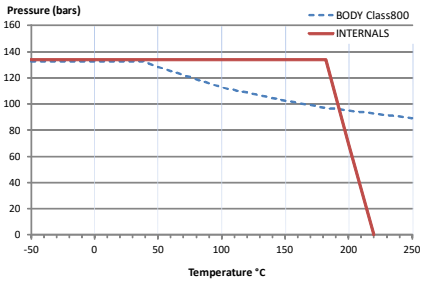

PEKOS GROUP CERTIFICATES:
ISO 9001: 2015 / 2014/68/EU /API-6D

DIMENSIONS & Technical information

DN	*CL*	*D*	*L*	*E*	*A*	*B*	*C*	*F*	*H*	*G*	*V*	*X*	*Y*	*Z*	*n x d*	*ISO 5211*	*Torque*	*MAST*	*Weight*
1/2"	800	11	75	-	22	19	9,5	31	145	82	10	5,5	7	9	- x -	F03	9	17	1
3/4"	800	15	80	-	27,5	21	12,5	34	145	85	10	5,5	8	10	- x -	F03	12	17	1
1"	800	21	100	-	34	28	12,5	39	180	101	12	7,5	13	15	- x -	F04	18	34	2
1 1/4"	800	25	110	-	43	37	12,5	38	180	105	12	7,5	14	20	- x -	F04	25	34	3
1 1/2"	800	32	120	-	49	44	12,5	41	220	108	15	9	21	28	- x -	F05	30	65	4
2"	800	38	140	-	61,5	51	16	47	220	110	15	9	18	28	- x -	F05	35	65	6

*** Depending on service conditions.* ** Dimensions are in mm.* ** Torque & MAST are in Nm* ** Weight is in Kilograms*
** Torque values have been measured ΔP at maximum rating at room temperature*

Rec del Molinar, 9-P-I. El Circuit -08160 Montmeló (Barcelona)-Spain

Tel.: (+34) 93 568 92 56

pekos@pekos.es

-The contents of this document are subject to change without prior notice due to the continuous development processes.