FIG.Z 04 SSSG PN16 DN15/200 F4-F5

DS-377
Rev.15
For Reference ☑
For Approval ☐

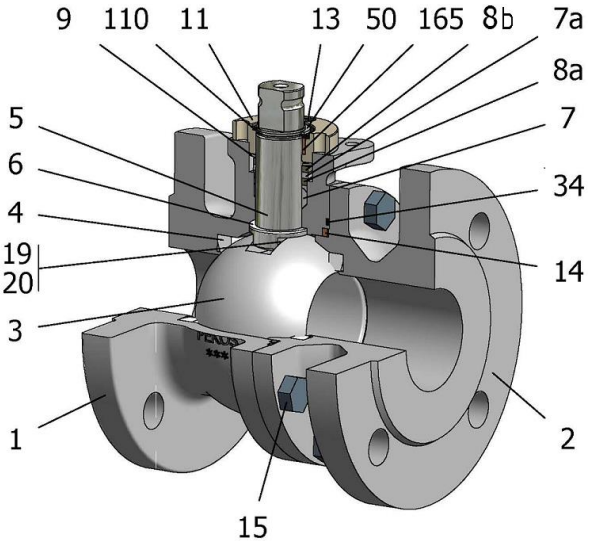

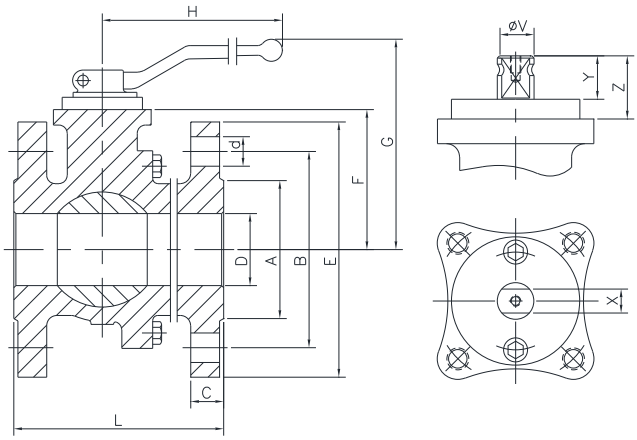

Position	Description	Material
01	Body 1	C.S. 1.0619
02	Body 2	C.S. 1.0619
03	Ball	S.S. 1.4408
04	Seat	PTFE (modified)+CG
05	Stem	S.S. 1.4401
06	Stem seal	PTFE (modified)+CG
07	Stem packing	PTFE (modified)+CG
07a	Stem packing 2	Graphite
08a	Gland packing 1	S.S. 1.4401
08b	Gland packing 2	S.S. 1.4401
09	Spring washer	S.S. 1.4310
11	Cover	S.S. 1.4408
13	Cover bolt	A4-70
14	Body seal 1	PTFE (modified)+CG
15	Body bolt	A2-70
16	Handle	WCB
17	Handle bolt	1.045(8.8)
19	Spring	S.S. 1.4401
20	Antistatic ball	S.S. 1.4401
34	Body seal 2	Graphite
50	Subjection ring	S.S. 1.4021
110	Subjection ring seal	S.S. 1.4401 Nitrided
165	Stem bearing	PTFE (modified)+FG

General features

Floating ball.
Split body.
Full bore.
Soft seat.
Bidirectional.
Anti Blow out proof stem.
Autoadjustable packing.
Anti static device.
Self-cavity pressure relief.

Standards

Top flange ISO 5211
Flanges EN 1092-01
Face to face EN 558
Testing EN-12266, ISO 5208
Design EN-12516, ISO 17292

Official approvals

CERTIFICATE FIRE SAFE
TÜV.AD-MERKBLATT A4
TA-LUFT VDI 2440
ISO 15848-1
ATEX 2014/34/EU
PED 2014/68/EU
SIL 3 CAPABLE
EN 161/EN ISO 23553-1

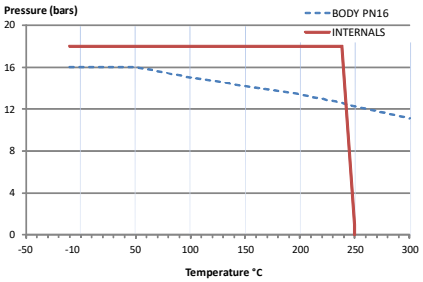

PEKOS GROUP CERTIFICATES:
ISO 9001: 2015 / 2014/68/EU /API-6D

DIMENSIONS & Technical information

DN	PN	D	L	E	A	B	C	F	H	G	V	X	Y	Z	n x d	ISO 5211	Torque	MAST	Weight
15	16	15	115	95	45	65	16	51	185	105	14	11	11	13,5	4 x 14	F05	10	44	3
20	16	20	120	105	58	75	18	53	185	107	14	11	11	13,5	4 x 14	F05	12	44	4
25	16	25	125	115	68	85	18	59	185	113	18	14	17	19,5	4 x 14	F05	17	95	5
32	16	32	130	140	78	100	18	64	185	118	18	14	17	19,5	4 x 18	F05	25	95	6
40	16	40	140	150	88	110	18	75	293	145	22	17	20	30	4 x 18	F07	37	250	8
50	16	50	150	165	102	125	20	83	293	153	22	17	20	30	4 x 18	F07	55	250	11
65	16	65	170	185	122	145	22	96	293	166	22	17	20	30	8 x 18	F07	66	250	17
80	16	80	180	200	138	160	24	114	450	205	28	22	22	40	8 x 18	F10	102	523	22
100	16	100	190	220	158	180	20	128	450	220	28	22	22	40	8 x 18	F10	132	523	30
125	16	125	325	250	188	210	22	158	740	267	36	27	35	50	8 x 18	F12	288	1073	56
150	16	150	350	285	212	240	22	175	740	284	36	27	35	50	8 x 22	F12	456	1073	75
200	16	201	400	340	268	295	24	245	750	362	48	36	40	63	12 x 22	F14	648	2544	134

*** Depending on service conditions.* ** Dimensions are in mm.* ** Torque & MAST are in Nm.* ** Weight is in Kilograms*
** Torque values have been measured ΔP at maximum rating at room temperature*

Rec del Molinar, 9-P-I. El Circuit - 08160 Montmeló (Barcelona)-Spain

Tel.: (+34) 93 568 92 56

pekos@pekos.es

-The contents of this document are subject to change without prior notice due to the continuous development processes.