FIG.Z 06 SSSG PN40 DN15/125 F4-F5

DS-376
Rev.8
For Reference ☑
For Approval ☐

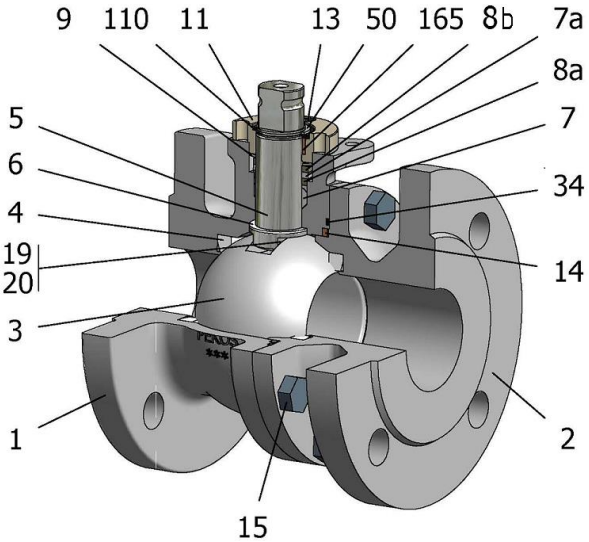

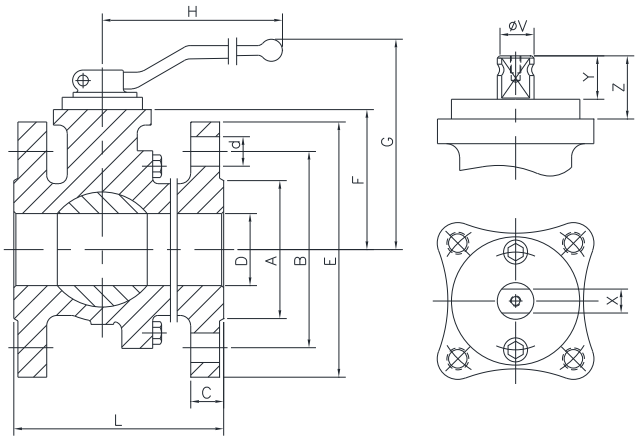

Position	Description	Material
01	Body 1	S.S. 1.4408
02	Body 2	S.S. 1.4408
03	Ball	S.S. 1.4408
04	Seat	PTFE (modified)+CG
05	Stem	S.S. 1.4401
06	Stem seal	PTFE (modified)+CG
07	Stem packing 1	PTFE (modified)+CG
07a	Stem packing 2	Graphite
08a	Gland packing 1	S.S. 1.4401
08a	Gland packing 2	S.S. 1.4401
09	Spring washer	S.S. 1.4310
11	Cover	S.S. 1.4408
13	Cover bolt	A4-70
14	Body seal 1	PTFE (modified)+CG
15	Body bolt	A4-70
16	Handle	WCB
17	Handle bolt	1.045(8.8)
19	Spring	S.S. 1.4401
20	Antistatic ball	S.S. 1.4401
34	Body seal 2	Graphite
50	Subjection ring	S.S. 1.4021
110	Subjection ring seal	S.S. 1.4401 Nitrided
165	Stem bearing	PTFE (modified)+FG

General features

Floating ball.
Split body.
Full bore.
Soft seat.
Bidirectional.
Anti Blow out proof stem.
Autoadjustable packing.
Anti static device.
Self-cavity pressure relief.

Standards

Top flange ISO 5211
Flanges EN 1092-01
Face to face EN 558
Testing EN-12266, ISO 5208
Design EN-12516, ISO 17292

Official approvals

CERTIFICATE FIRE SAFE
TÜV.AD-MERKBLATT A4
TA-LUFT VDI 2440
ISO 15848-1
ATEX 2014/34/EU
PED 2014/68/EU
SIL 3 CAPABLE
EN 161/EN ISO 23553-1

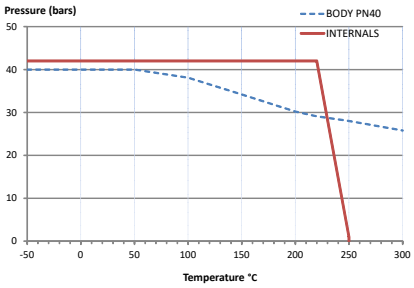

PEKOS GROUP CERTIFICATES:
ISO 9001: 2015 / 2014/68/EU /API-6D

DIMENSIONS & Technical information

DN	*PN*	*D*	*L*	*E*	*A*	*B*	*C*	*F*	*H*	*G*	*V*	*X*	*Y*	*Z*	*n x d*	*ISO 5211*	*Torque*	*MAST*	*Weight*
15	40	15	115	95	45	65	16	52	185	100	14	11	11	13,5	4 x 14	F05	14	44	3
20	40	20	120	105	58	75	18	54	185	102	14	11	11	13,5	4 x 14	F05	17	44	4
25	40	25	125	115	68	85	18	60	185	110	18	14	17	19,5	4 x 14	F05	22	95	5
32	40	32	130	140	78	100	18	65	185	115	18	14	17	19,5	4 x 18	F05	36	95	6
40	40	40	140	150	88	110	18	75	293	129	22	17	20	30	4 x 18	F07	48	250	8
50	40	50	150	165	102	125	20	83	293	137	22	17	20	30	4 x 18	F07	78	250	11
65	40	65	170	185	122	145	22	96	293	150	22	17	20	30	8 x 18	F07	102	250	17
80	40	80	180	200	138	160	24	114	450	187	28	22	22	40	8 x 18	F10	156	523	22
100	40	100	190	235	162	190	24	128	450	201	28	22	22	40	8 x 22	F10	228	523	30
125	40	125	325	270	188	220	26	158	740	247	36	27	35	50	8 x 26	F12	420	1073	62

*** Depending on service conditions.* ** Dimensions are in mm.* ** Torque & MAST are in Nm.* ** Weight is in Kilograms*
** Torque values have been measured ΔP at maximum rating at room temperature*

Rec del Molinar, 9-P-I. El Circuit - 08160 Montmeló (Barcelona)-Spain

Tel.: (+34) 93 568 92 56

pekos@pekos.es

-The contents of this document are subject to change without prior notice due to the continuous development processes.