FIG.ZMV 04 CTTG PN40 DN15/125 F4-F5

DS-3438
Rev.5
For Reference ☑
For Approval ☐

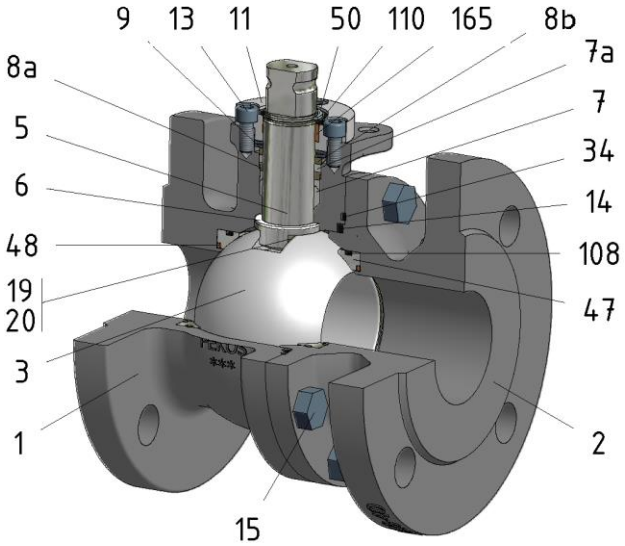

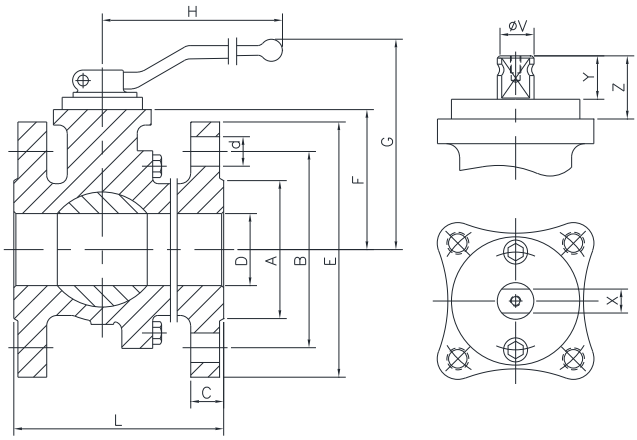

Position	Description	Material
01	Body 1	C.S. 1.0619
02	Body 2	C.S. 1.0619
03	Ball	1.4408+Cr-Carbide
05	Stem	XM-19
06	Stem seal	PTFE (modified)+FG
07	Stem packing	PTFE (modified)
07a	Stem packing 2	Graphite
08a	Gland packing 1	S.S. 1.4401
08b	Gland packing 2	S.S. 1.4401
09	Spring washer	S.S. 1.4310
11	Cover	S.S. 1.4408
13	Cover bolt	A4-70
14	Body seal 1	PTFE (modified)
15	Body bolt	A2-70
16	Handle	WCB
17	Handle bolt	1.045(8.8)
19	Spring	S.S. 1.4401
20	Antistatic ball	S.S. 1.4401
34	Body seal 2	Graphite
47	Metal seat	1.4401+Cr-Carbide
48	O ring spring	FKM
50	Subjection ring	S.S. 1.4021
108	O ring seat	FKM
110	Subjection ring seal	S.S. 1.4401 Nitrided
165	Stem bearing	PTFE (modified)+FG

General features

Floating ball.
Split body.
Full bore.
Metal to Metal.
Bidirectional.
Anti Blow out proof stem.
Autoadjustable packing.
Anti static device.
Self-cavity pressure relief.

Standards

Top flange ISO 5211
Flanges EN 1092-01
Face to face EN 558
Testing EN-12266, ISO 5208
Design EN-12516, ISO 17292

Official approvals

CERTIFICATE FIRE SAFE
TA-LUFT VDI 2440
ISO 15848-1
ATEX 2014/34/EU
PED 2014/68/EU
SIL 3 CAPABLE

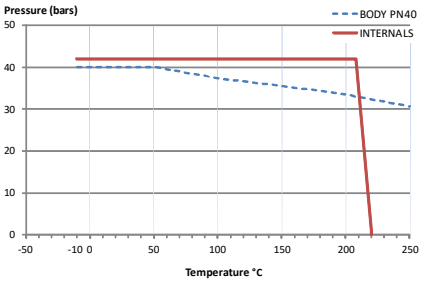

PEKOS GROUP CERTIFICATES:
ISO 9001: 2015 / 2014/68/EU /API-6D

DIMENSIONS & Technical information

DN	PN	D	L	E	A	B	C	F	H	G	V	X	Y	Z	n x d	ISO 5211	Torque	MAST	Weight
15	40	15	115	95	45	65	16	51	185	105	14	11	11	13,5	4 x 14	F05	25	81	3
20	40	20	120	105	58	75	18	53	185	107	14	11	11	13,5	4 x 14	F05	34	81	4
25	40	25	125	115	68	85	18	59	185	113	18	14	17	19,5	4 x 14	F05	46	175	5
32	40	32	130	140	78	100	18	64	185	118	18	14	17	19,5	4 x 18	F05	68	175	6
40	40	40	140	150	88	110	18	75	293	145	22	17	20	30	4 x 18	F07	90	464	8
50	40	50	150	165	102	125	20	83	293	153	22	17	20	30	4 x 18	F07	137	464	11
65	40	65	170	185	122	145	22	96	293	166	22	17	20	30	8 x 18	F07	222	464	16
80	40	80	180	200	138	160	24	114	450	205	28	22	22	40	8 x 18	F10	320	969	22
100	40	100	190	235	162	190	24	128	450	220	28	22	22	40	8 x 22	F10	445	969	30
125	40	125	325	270	188	220	26	158	740	267	36	27	35	50	8 x 26	F12	845	1990	62

*** Depending on service conditions.* ** Dimensions are in mm.* ** Torque & MAST are in Nm.* ** Weight is in Kilograms*
** Torque values have been measured ΔP at maximum rating at room temperature*

Rec del Molinar, 9-P-I. El Circuit - 08160 Montmeló (Barcelona)-Spain

Tel.: (+34) 93 568 92 56

pekos@pekos.es

-The contents of this document are subject to change without prior notice due to the continuous development processes.